Saké

BEDS

2017

Piero Lissoni

Description

Saké is a strongly contemporary sofa bed that stands out for its absolute formal balance. The only sofa bed in the B&B Italia collection, it features the same seating and back elements as the system of sofas of the same name. By simply translating the seat and tilting the backrest, it transforms easily from a sofa into a bed. Upholstered either in fabric or in leather, it is available in three versions: with a right-hand armrest, with a left-hand armrest and with two armrests. The support base is made of crosspieces with rounded steel feet connected to each other by a bar.

Technical information

Internal frame
multi-layered wood panel
Seat and back upholstery
shaped polyurethane of different density, polyester fibre cover
Back cushion (SK90C)
combination of polyester fibre and visco-elastic polyurethane, polyester fibre cover, box style typology
Support frame
steel
Ferrules
thermoplastic material
Cover
fabric or leather

Technical drawings

LSK223S

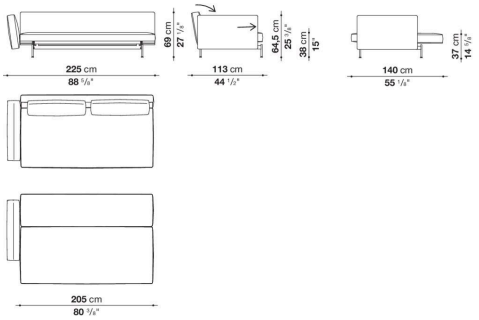

LSK223D

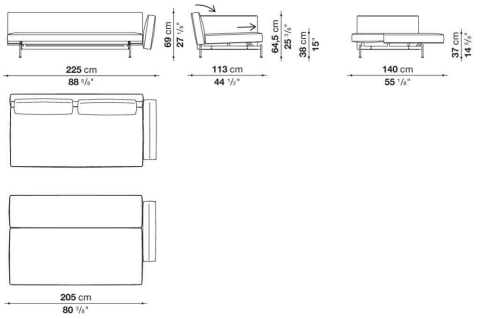
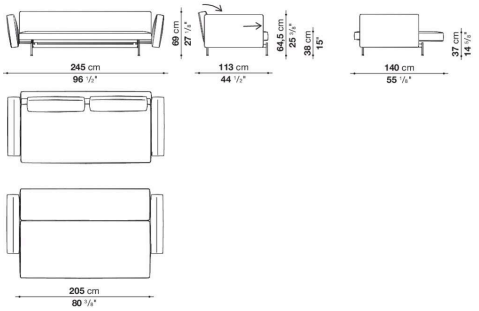
LSK245