Canasta '13

SOFAS

2013

Patricia Urquiola

Description

Canasta ‘13 is a family of seats that preserves the iconic design of the Canasta series while donning a new look to blend even more with the external environment. The sofas and armchairs making up the series are characterised by a light interlacing of mélange polyethylene yarn which lets the light shine through. Particularly striking is the oversized circular sofa, which can be equipped with a 360° swivel base and a light foldable hood that reduces the passage of sunrays by up to 92%. The collection is available in a wide variety of textile covers.

Technical information

Frame
aluminium or steel with polyester powder painting
Interlacing
polyethylene fibre
Seat cushion (CNC190B-CNC226B)
shaped polyurethane, cover in water repellent polyester fibre (with heat-sealed ribbon)
Seat cushion (CNC160P1)
shaped polyurethane, cover in water repellent polyester fibre
Back cushion
polyester fibre, cover in water repellent polyester fibre
Canopy frame (CNC160P1C)
glass fibre
Canopy mechanism (CNC160P1C)
electro polished steel, anodized aluminium
Canopy cover (CNC160P1C)
Balivo fabric
Wheels and ferrules
thermoplastic material
Waterproof cover cloth
PES fabric coated on one side in PU
Cover
fabric in limited categories

Technical drawings

CNC190B

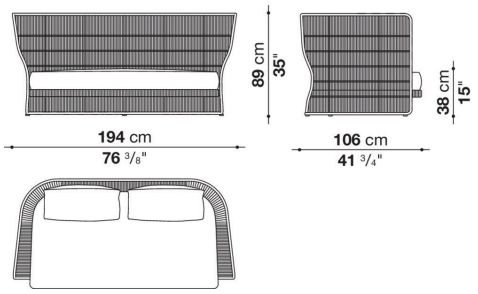

CNC226B

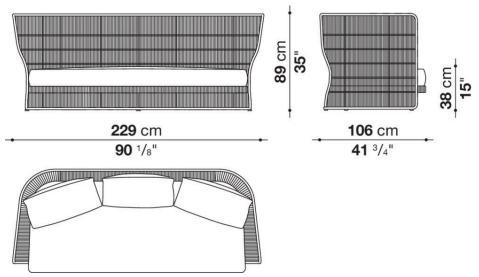

CNC160P1

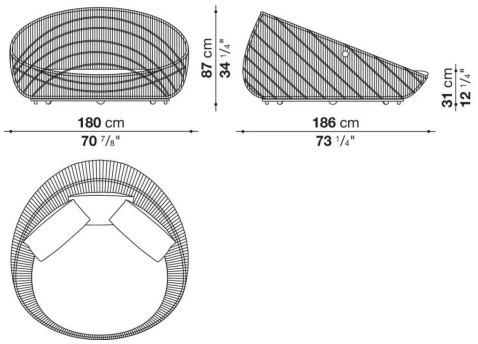
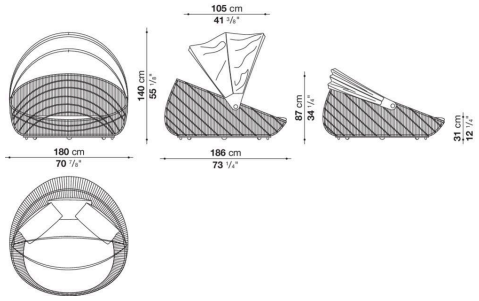
CNC160P1
CNC160P1C