Colosseo Outdoor

SMALL TABLES

2020

Naoto Fukasawa

Description

Colosseo Outdoor, like the indoor version, fits smoothly into the highly successful product category of accessories, furnishing elements that change function according to occasion and need, in this case from coffee table to ottoman. When designing this object, Naoto Fukasawa arrived at the desired shape by considering a solid in the form of an upside-down truncated cone, lightened by arch-shaped grooves that define the surface, creating an assonance with the structure of the famous Roman arena it is named after. Available in two sizes, Colosseo Outdoor is made of porcelain stoneware.

Technical information

Frame and top
stoneware
Ferrules
plastic material
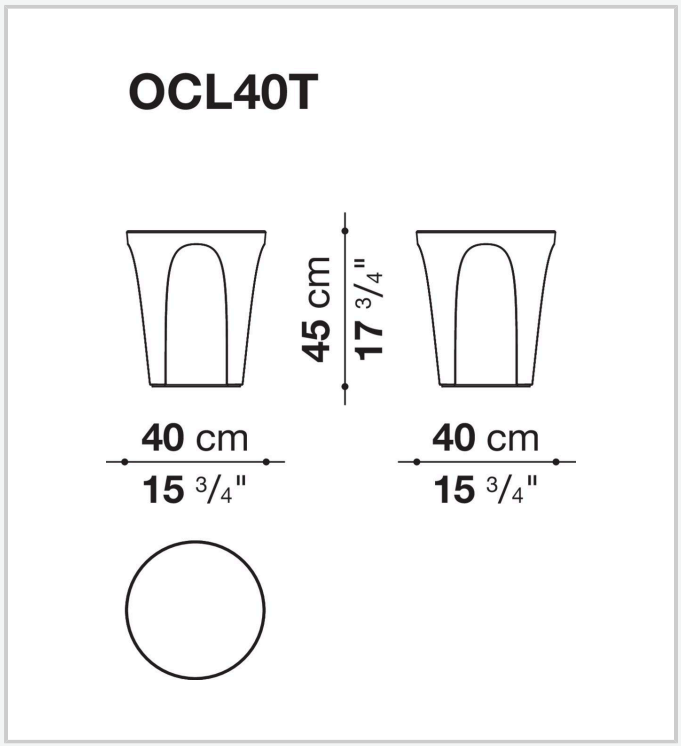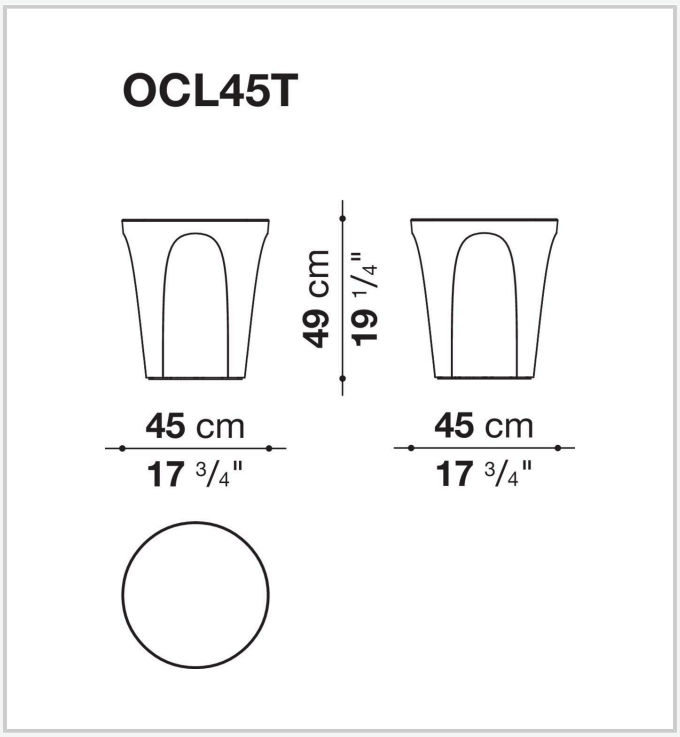
Technical drawings