Inside

OGGETTISTICA

2005

Naoto Fukasawa

Description

An egg with its container, a solid and a hollow part, the convexity and concavity of a hold-all container. In an elegant glossy lacquer finish, available in black or white, Fukasawa presents his personal and humorous interpretation of the classic oriental theme of opposites, positive and negative, yin and yang. The egg can be taken apart into four ready-for-use trays.

Technical information

Material
glossy high density polyurethane resin
Colour
white or black
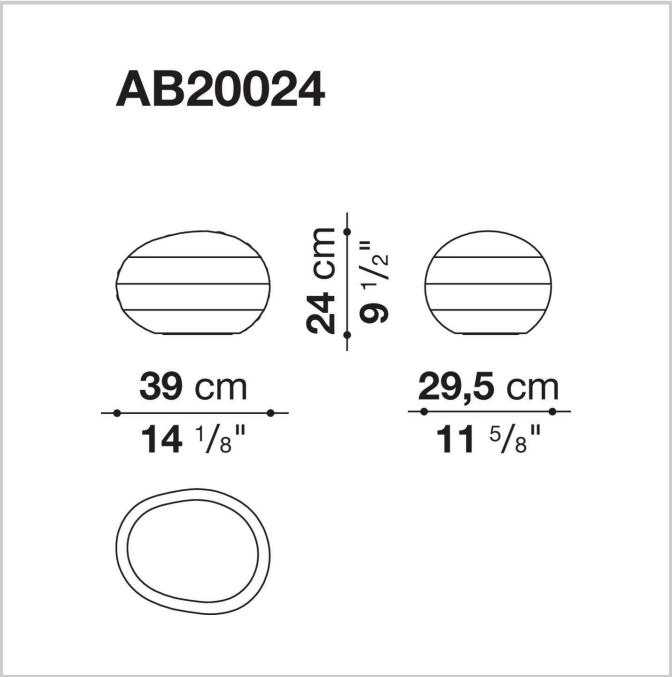
Technical drawings